NNc

Niroo Novin AC Drive-Option

BRAKING UNIT,
BRAKING RESISTOR UNIT
INSTRUCTIONS

MODEL: BRAKING RESISTOR BRU-_ _ _

Upon receipt of the product and prior to initial operation, read these instructions thoroughly, and retain for future reference.

NirooNovin Co.

PREFACE

Braking resistor unit and braking unit are used to consume regenerative energy from motor in the braking resistor unit at deceleration and to improve the transistor inverter braking ability.

Before using the braking resistor unit and braking unit, a thorough understanding of this manual is recommended. This instruction manual will be of great help for daily maintenance, inspection and troubleshooting.

Inverters to which the braking resistor unit and braking unit can be connected are of the following series:

Braking Resistor Unit

Inverter		Resistor Spec (Per Unit)	Model	Dimensions		
Voltage	HP(kW)			W	H	D
200 to 230 v	1 (0/75)	70w 200Ω	BRU-S200R70W	4/5	15	9
	2 (1/5)	260w 100Ω	BRU-S100R260W	4/5	15	9
	3 (2/2)	260w 70Ω	BRU-S70R260W	4/5	15	9
380 to 460 v	1 (0/75)	70w 750Ω	BRU-S750R70W	4/5	15	9
	2 (1/5)	260w 400Ω	BRU-S400R260W	4/5	15	9
	3 (2/2)	260w 250Ω	BRU-S250R260W	4/5	15	9
	5 (3/7)	550w 120Ω	BRU-S120R550W	4/5	15	9
	7/5 (5/5)	1500w 80Ω	BRU-B80R1500W	4/5	15	9
	10 (7/5)	2000w 60Ω	BRU-B60R2000W	12/5	15	13
	15 (11)	2500w 45Ω	BRU-B45R2500W	12/5	15	13
	20 (15)	3000w 35Ω	BRU-B35R3000W	12/5	20	13
	30 (22)	4800w 27/2Ω	BRU-B27/2R4800W	12/5	35	13
	40 (30)	6000w 20Ω	BRU-B20R6000W	12/5	40	13
	50 (37)	9600w 16Ω	BRU-B16R9600W	12/5	55	13
	60 (45)	9600w 13/6Ω	BRU-B13/6R9600W	12/5	70	13

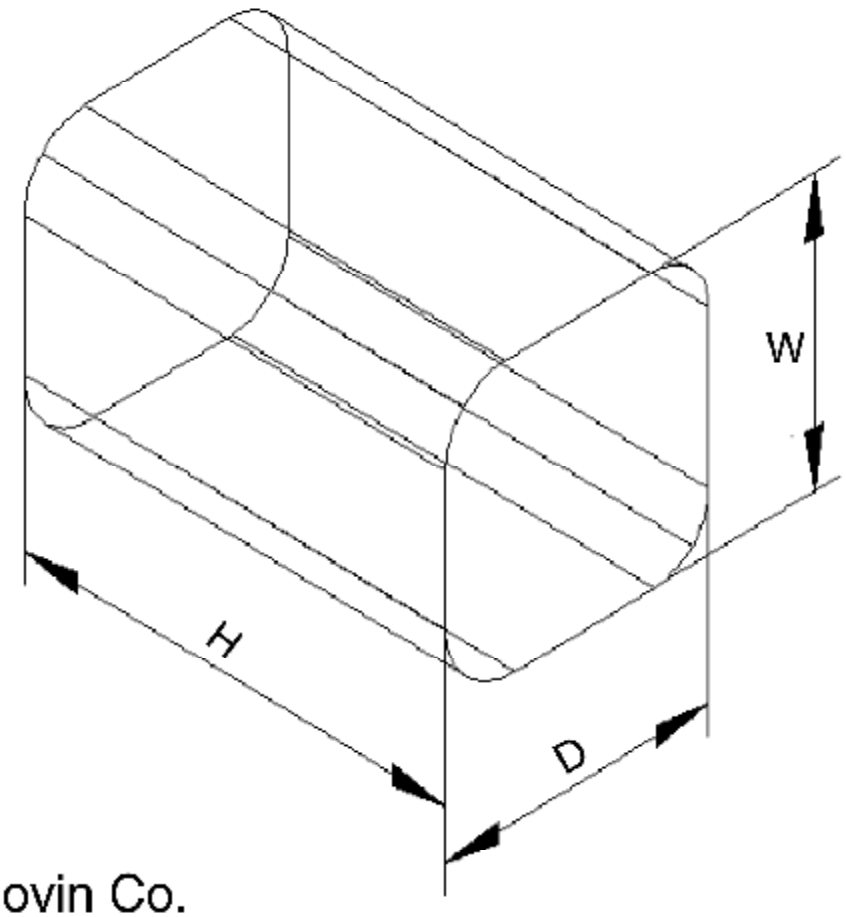

Niroo Novin AC Drive-Option

BRAKING RESISTOR UNIT

MODEL: BRAKING RESISTOR BRU-_ _ _

INSTRUCTIONS

NirooNovin Co.

194 EMAM KHOMEINY Sq. QOM, IRAN

Phone : + 98 (25) 36125

Fax : + 98 (25) 36670779

Site : www.nnc.ir

Email : info@nnc.ir